pamar

MN 2739 I

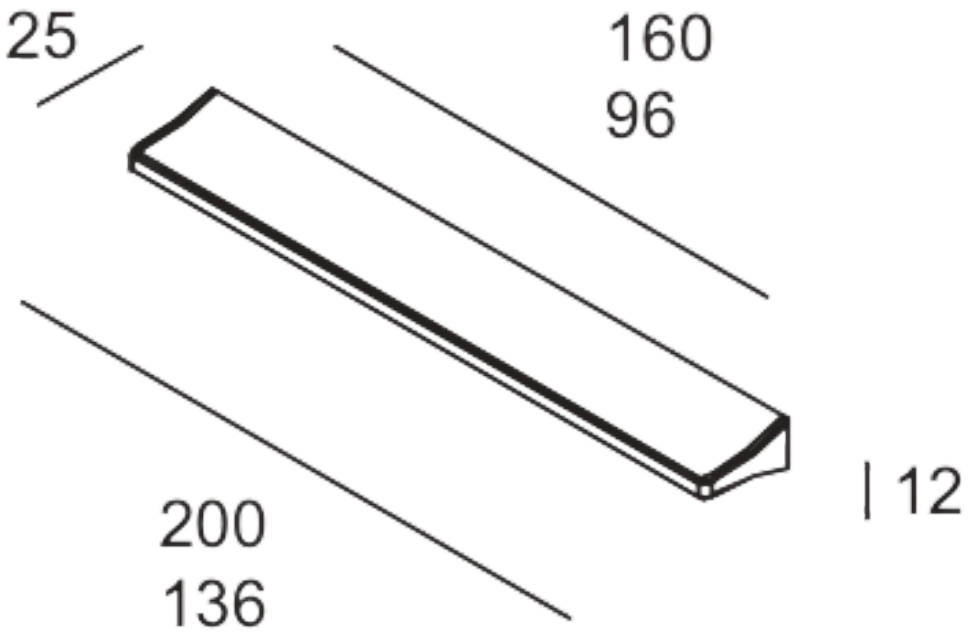

Pezzo unico / One piece

Pamar S.r.l.
Via Sirtori 41, 20838
Renate (MB), Italy

International patents have been deposited for Pamar models.
Imitations will be punished by law.